(Embedded System Lab)

EXPERIMENT NO: 05

ROLL No:

NAME:

Aim: Interfacing of a stepper motor (to move by a particular angle) with arduino uno.

Apparatus: Arduino Uno, Stepper motor, Stepper motor driver (ULN2003), computer and internet.

Theory:

Stepper Motor is a brushless DC Motor. Control signals are applied to stepper motor to rotate it in steps.Its speed of rotation depends upon rate at which control signals are applied. There are various stepper motors available with minimum required step angle.Stepper motor is made up of mainly two parts, a stator and rotor. Stator is of coil winding and rotor is mostly permanent magnet or ferromagnetic material.

Step Angle

Step angle is the minimum angle that stepper motor will cover within one move/step. Number of steps required to complete one rotation depends upon step angle. E.g. If step angle is of 45° then 8 steps are required to complete one rotation as shown in figure below.

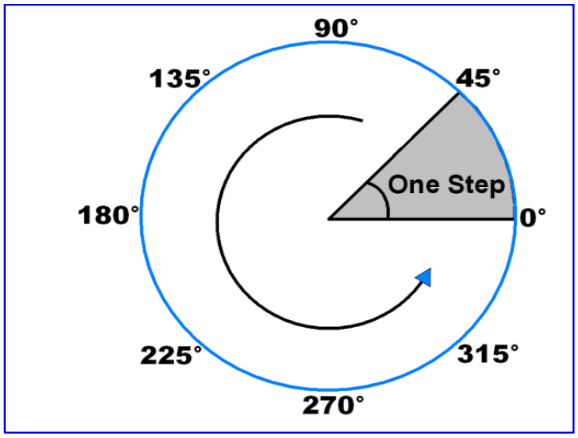

Stepper motors are classified depending upon construction and winding arrangement.

Depending upon winding arrangement

Unipolar Stepper Motor

Bipolar Stepper Motor

Depending upon construction

- Permanent Magnet Stepper Motor
- Variable Reluctance Stepper Motor
- Hybrid Stepper Motor

Driver IC: ULN2003

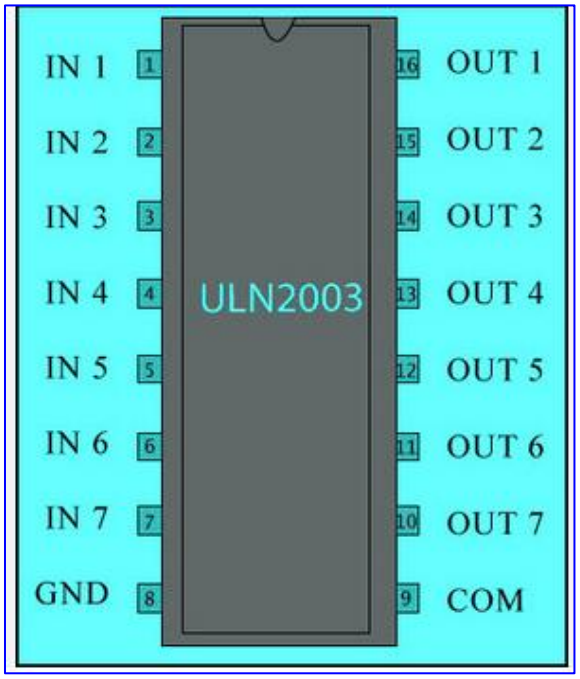

Stepper Motor symbol:

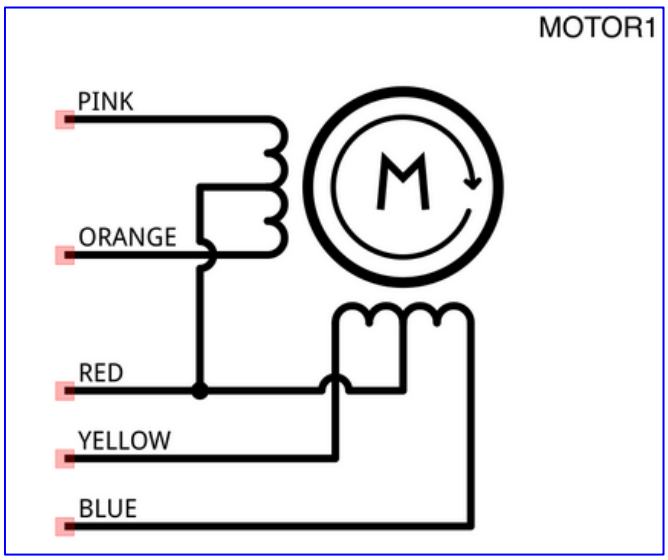

Circuit Diagram:

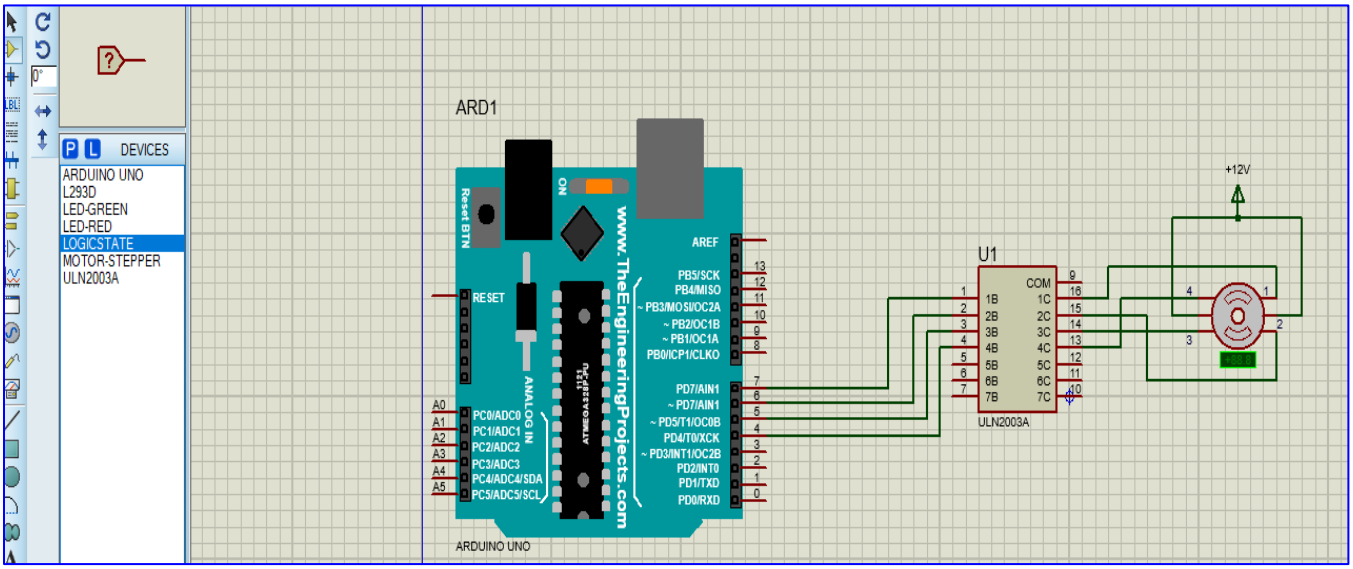

Code:

```
void setup() {
pinMode(4, OUTPUT);
  pinMode(5, OUTPUT);
  pinMode(6, OUTPUT);
  pinMode(7, OUTPUT);
}

void loop() {
 / /* Rotation 360 angle in one direction (clock wise) and take 4 round of 360 angle *//
  for(int i = 0; i<5; i++)
  {
    digitalWrite(7, HIGH);
    digitalWrite(6, LOW);
    digitalWrite(5, LOW);
    digitalWrite(4, LOW);
    delay(100);
    digitalWrite(7, LOW);
    digitalWrite(6, HIGH);
    digitalWrite(5, LOW);
    digitalWrite(4, LOW);
    delay(100);
```

```
   digitalWrite(7, LOW);
   digitalWrite(6, LOW);
   digitalWrite(5, HIGH);
   digitalWrite(4, LOW);
   delay(100);
   digitalWrite(7, LOW);
   digitalWrite(6, LOW);
   digitalWrite(5, LOW);
   digitalWrite(4, HIGH);
   delay(100);
  }

//* Rotation 360 angle in opposite (counter clock wise) direction and take 4 round of 360 angle */
  for(int j = 0; j<5; j++)
  {
   digitalWrite(7, LOW);
   digitalWrite(6, LOW);
   digitalWrite(5, LOW);
   digitalWrite(4, HIGH);
   delay(100);
   digitalWrite(7, LOW);
   digitalWrite(6, LOW);
   digitalWrite(5, HIGH);
   digitalWrite(4, LOW);
   delay(100);
   digitalWrite(7, LOW);
   digitalWrite(6, HIGH);
   digitalWrite(5, LOW);
   digitalWrite(4, LOW);
   delay(100);
   digitalWrite(7, HIGH);
   digitalWrite(6, LOW);
   digitalWrite(5, LOW);
   digitalWrite(4, LOW);
delay(100);
}


}
```

Conclusion:In conclusion, we have successfully interfaced a stepper motor with an Arduino Uno to control its movement by specific angles. This expriment demonstrates the precise control achievable through Arduino-based systems. The stepper motor's rotation was effectively controlled in both clockwise and counterclockwise directions.

The image part with relationship ID rId13 was not found in the file.